REV.	EC#	DESCRIPTION	DATE	APPROVED
A		新版发行	2019.12.30	

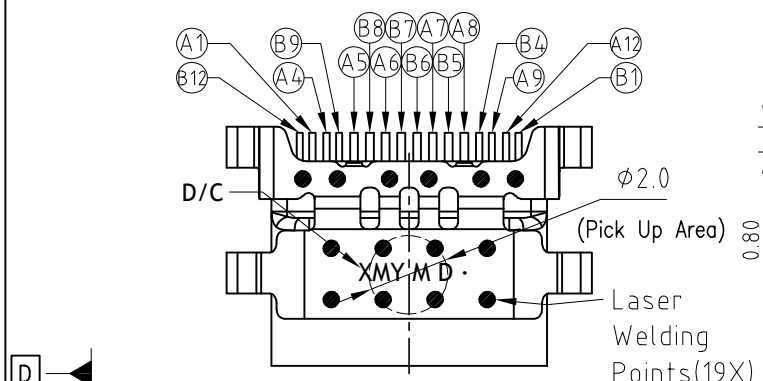

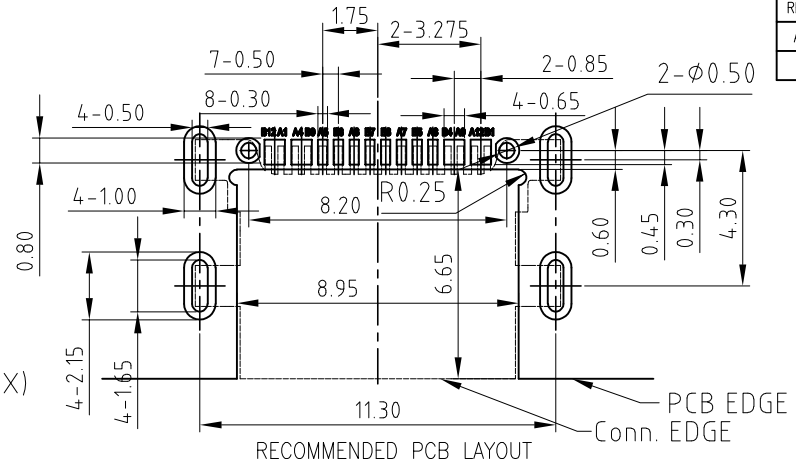

RECOMMENDED PCB LAYOUT
TOLERANCE:±0.05

NOTES:
SPECIFICATION:
1. CURRENT RATING: 3.0A MAX
2. VOLTAGE: 100 VAC
3. TEMPERATURE RANGE: -30 °C ~ 85 °C
4. CONTACT RESISTANCE: 40 MILLIONHM MAX
5. INSULATION RESISTANCE: 100 MEGOHMS MIN.
6. LNSERTION FORCE : 5N~20N
7. UNMATING FORCE: 8N~20N
8. DURABILITY: 10,000 CYCLES

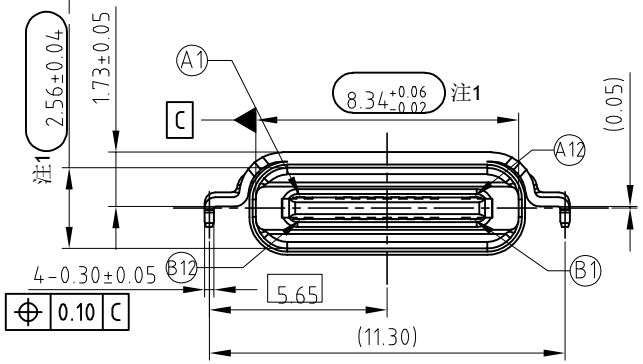

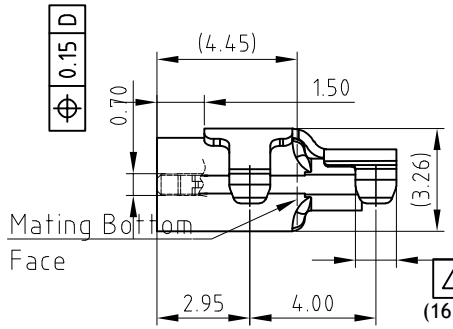

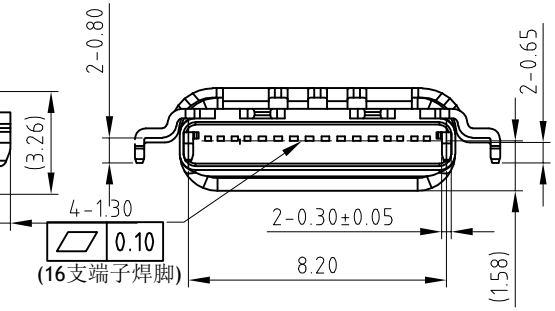

Pin Assignments

Contact Number	Signal Name	Contact Number	Signal Name
A1	GND	B12	GND
A4	VBUS	B9	VBUS
A5	CC1	B8	SBU2
A6	Dp1	B7	Dn2
A7	Dn1	B6	Dp2
A8	SBU1	B5	CC2
A9	VBUS	B4	VBUS
A12	GND	B1	GND

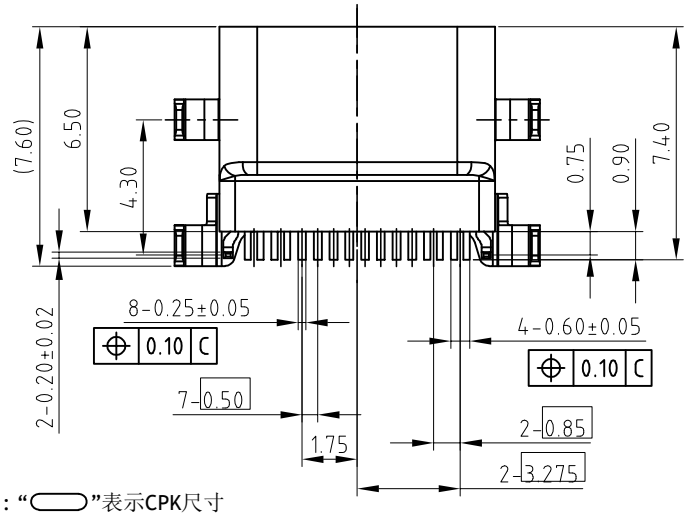

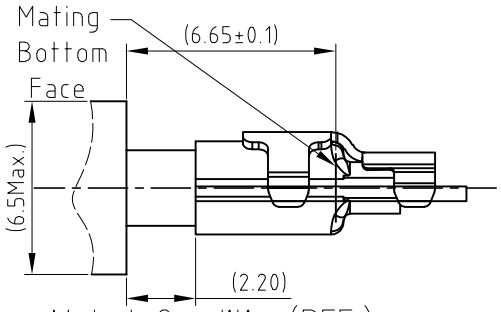

Mated Condition(REF.)

NO.	DESCRIPTION	MATERIAL	REMARKS	QTY
8	TOP SHELL	STAINLESS STEEL	TI/NI Plated	1PCS
7	SHELL	STAINLESS STEEL	NI Plated	1PCS
6	OVER MOLDING	HIGH TEMPERATURE PLASTIC	BLACK	1PCS
5	TOP I/M	HIGH TEMPERATURE PLASTIC	BLACK	1PCS
4	BOTTOM I/M	HIGH TEMPERATURE PLASTIC	BLACK	1PCS
3	MID PLATE	STAINLESS STEEL	TI/NI Plated	1PCS
2	CONTACT	COPPER ALLOY	Au/NI Plated	1SET
1	CONTACT	COPPER ALLOY	Au/NI Plated	1SET

TOLERANCES UNLESS OTHERWISE SPECIFIED
GENERAL X. ±0.38 / .X ±0.25 / .XX ±0.15 / .XXX ±0.05
ANGLES X.° ±3.0° / .X ±2.0° / .XX ±1.0°

SCALE
SHEET 1 OF 1
UNIT mm

PART NUMBER:
APPROVED DATE
CHECKED DATE
DESIGN DATE 2019.12.30

东莞市溪榜电子有限公司
DONG GUAN XI BANG ELECTRONI CS CO.,LTD.

TITLE Customer Drawing for
USB Type-C 母 16pin 沉板1.58
防水型（6.5拉伸壳）成品

SERIES
SIZE A4
DWG NO. C-0000-481
REV. A

注1: "⬭"表示CPK尺寸

These drawings and specifications are the property of Dongguan Xibang Electronics Co., Ltd. and should not be copied. Without the prior written consent of Dongguan Xibang Electronics Co., Ltd., it shall not be copied or used in any way